DS8110

DATALOGIC

IDENTIFICATION

DS8110 is the new bar code reader offering top class reading performance at any operative conditions, designed to satisfy the most demanding applications in the Parcel Sorting and Baggage Handling applications.

Combining 30+ years experience and the most advanced technologies, DS8110 sets a new standard in T&L applications offering unique features and benefits.

The innovative DST (Digital Signal Technology) represents a milestone in Auto-ID market with drastic increase of DoF and FoV, even with unpredictable code quality.

DST offers stable and constant performance under any working conditions to assure logistic operators timely deliveries every days.

ASTRA™ G3, the latest version of ASTRA technology,offers outstanding performance multiplying optic capability and deep of field without any use of traditional and limited mechanical autofocus system.

Multi-headed tunnel configurations are perfectly managed based with new EBC-Ethernet Bus Connection, allowing high speed data transmission and real time signal synchronization inside the system. EBC allows for redundant configuration, assuring no system deadlock in case of component failure.

Ease of use, automatic setup and system diagnostics are perfectly satisfied thanks to e-GENIUS, the web browser configuration tool that allows you to access the system with a standard web-browser program with no need for specific configuration software.

DST | ASTRA G3 | EBC | ACR G5 | PackTrack G2 | e-GENIUS

HIGHLIGHTS

- Top Class Reading Performance thanks to Datalogic exclusive technologies
- Excellent performance on low quality codes and unpredictable reading conditions
- DST (Digital Signal Technology) offering stable and constant performance at any operative conditions
- ASTRA G3 technology offering superior DoF and FoV without mechanical autofocus
- Ethernet Bus Connections (EBC) for high speed data transmission and real time synchronization
- Fully redundant configuration and no single point of failure
- Compact mechanical dimensions; lightweight
- Ease of use and ease of installation thanks e-GENIUS web browser and programming tools
- Standard solutions for Parcel Sorting and Baggage Handling applications
- Ease of maintenance and automatic replacement

TARGET MARKETS AND APPLICATIONS

1. Airport Baggage Handling
2. Parcel Sorting
3. Retail Distribution Center
4. Loading/Unloading System
5. Shop Floor and Manufacturing
6. Automatic Warehousing Management

DS8110

DATALOGIC

TECHNICAL SPECIFICATIONS

Reading Distance (Min/Max)	500-1900 mm (20 -75 in)
Max Resolution	Min:0.25mm (10mils)/Max: 0.50mm (20mils)
Scan Rate	Typ.:1000 scans/s/ Max.:
Scan Pattern Type	Linear
Aperture Angle	60 degrees
Multilabel Reading	Up to 10 different symbologies during the same reading phase
Optic Architecture/Technology	ASTRA™ G3
Bar Code Assignment Technology	PackTrack™ G2
Reconstruction Code Technology	ACR™ G5
Readable Codes	22 symbologies including 2/5 family, Code39, Code93, Code128, EAN/UPC, EAN128, ISBN128
Case Material	Aluminum alloy
Dimensions (Typical Value)	216 x 96 x 127 mm [8.5 x 3.8 x 5 in]
Weight	2.0 kg (4.4 lb)
Temperature Range	0° - 50°C
Power Supply/Consumption	20 to 30 VDC; 20 W
Ip Rating	IP65
Ethernet	2 x Ethernet TCP/IP
Serial Interfaces	Main Port: RS232/RS422 up to 115.2 Kbit/s Auxiliary Port: RS232 up to 115.2 Kbit/s
Internal Communication System	EBC Technology
Fieldbus	Embedded EtherNet/IP; PROFINET-IO and PROFIBUS-DP supported
Digital Inputs	3 x Inputs (2+1 x "Encoder"), optocoupled, NPN/PNP
Digital Outputs	2 x Outputs SW programmable, optocoupled, event driven, NPN
Configuration Software	e-GENIUS web browser

MECHANICAL DRAWINGS

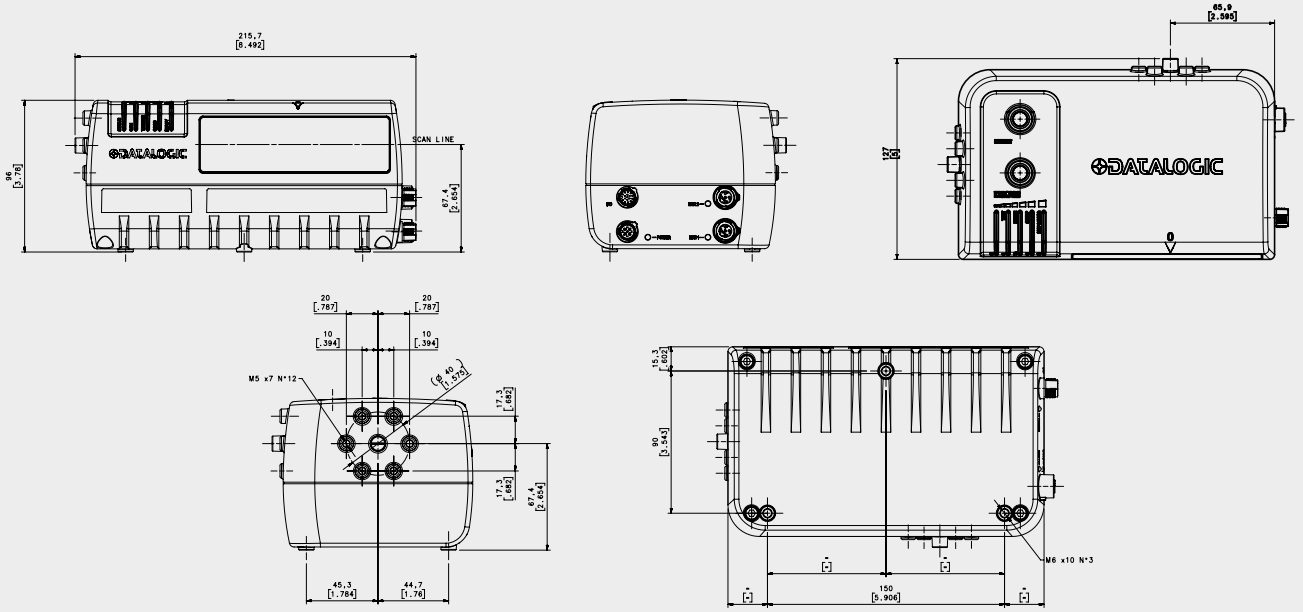

MODELS

MODEL	DESCRIPTION	PART NUMBER
DS8110-2100	DS8110-2100 Standard	932500001
DS8110-2200	DS8110-2200 High Resolution	932500002

Rev. 01, 03/2014

www.datalogic.com

The company endeavours to continuously improve and renew its products; for this reason the technical data and contents of this catalogue may undergo variations without prior notice. For correct installation and use, the company can guarantee only the data indicated in the instruction manual supplied with the products. Product and Company names and logos referenced may be either trademarks or registered trademarks of their respective companies. We reserve the right to make modifications and improvements.